MOUNTING AND OPERATING INSTRUCTIONS

EB 3962-4 EN

Translation of original instructions

Type 3962-4 Solenoid Valve

Edition November 2020

Ex certified

SIL/PL Capability

TÜVRheinland CERTIFIED

www.tuv.com
ID 0600000000

Note on these mounting and operating instructions

These mounting and operating instructions assist you in mounting and operating the device safely. The instructions are binding for handling SAMSON devices. The images shown in these instructions are for illustration purposes only. The actual product may vary.

➔ For the safe and proper use of these instructions, read them carefully and keep them for later reference.

➔ If you have any questions about these instructions, contact SAMSON's After-sales Service (aftersalesservice@samsongroup.com).

Documents relating to the device, such as the mounting and operating instructions, are available on our website at ***www.samsongroup.com > Service & Support > Downloads > Documentation***.

Definition of signal words

⚠ DANGER

Hazardous situations which, if not avoided, will result in death or serious injury

⚠ WARNING

Hazardous situations which, if not avoided, could result in death or serious injury

NOTICE

Property damage message or malfunction

Note

Additional information

Tip

Recommended action

1 General safety instructions

– The device is to be mounted, started up or operated only by trained and experienced personnel familiar with the product.
According to these mounting and operating instructions, trained personnel refers to individuals who are able to judge the work they are assigned to and recognize possible dangers due to their specialized training, their knowledge and experience as well as their knowledge of the applicable standards.
– Explosion-protected versions of this device must be operated only by personnel who has undergone special training or instructions or who is authorized to work on explosion-protected devices in hazardous areas.
– Any hazards that could be caused in the control valve by the process medium, the signal pressure or by moving parts are to be prevented by taking appropriate precautions.
– The supply pressure must not exceed the maximum permissible limit and must be limited by a pressure reducing valve, if necessary.
– If inadmissible motions or forces are produced in the pneumatic actuator as a result of the supply pressure, it must be restricted using a suitable supply pressure reducing station.
– Proper shipping and storage are assumed.

1.1 Legal information

The Type 3962 Solenoid Valve bears a CE marking. The declaration of conformity includes information about the applied conformity assessment procedure. The declarations of conformity are included in the Annex of these instructions.

1.2 Warnings on the device

Warning	Meaning of the warning
	Warning against sudden loud noise The solenoid valve mounted onto the control valve can cause the pneumatic actuator to vent. A loud noise may occur during venting. This can cause hearing damage.

2 Markings on the device

2.1 Article code

Solenoid valve	Type 3962-	x	x	x	x	x	x	x	x	x	x	x	x	x	x	x	x	x	x	x	x
Type of protection	Ex em	**4**																			
Nominal signal	24 V AC/DC		**2**	**0**																	
	230 V AC/DC		**4**	**0**																	
Explosion protection certificate	II 2G Ex eb em IIC T4/T5/T6 Gb II 2D Ex tb IIIC T4/T5/T6 (ATEX)				**3**	**1**	**0**														
Manual override	Without							**0**													
Switching function	3/2-way function with spring-return mechanism								**0**												
	5/2-way function with spring-return mechanism [1]								**1**												
	5/2-way function with two detent positions								**2**												
	5/3-way function with spring-centered mid-position (ports 2 and 4 closed)								**3**												
	5/3-way function with spring-centered mid-position (ports 2 and 4 vented)								**5**												
	6/2-way function with spring-return mechanism								**6**												
Attachment	NAMUR interface according to VDI/VDE 3845									**0**											
	Threaded connection for wall or pipe mounting									**1**											
	CNOMO interface, 30 mm (pilot valve as spare part)									**2**											
K_{VS} [2]	1.4										**3**										
	4.3										**4**										
	0.05 (pilot valve as spare part)										**5**										
	2.9 [3]										**6**										
	2.0										**7**										

[1] Not with NAMUR interface/K_{VS} 4.3
[2] The air flow rate when p_1 = 2.4 bar and p_2 = 1.0 bar is calculated using the following formula: $Q = K_{VS} \times 36.22$ in m^3/h.
[3] On request

Solenoid valve	Type 3962-	x	x	x	x	x	x	x	x	x	x	x	x	x	x	x	x	x	x	x	x	x
Material	Aluminum											0										
Pneumatic connection	G ¼												0									
	¼ NPT												1									
	G ½												2									
	½ NPT												3									
	Without threaded connections (pilot valve as spare part)												4									
Supply	Internal pilot supply for actuators for on/off service													0								
	External pilot supply for actuators for throttling service													1								
Electrical connection	Cable gland M20x1.5, black polyamide														0	1						
Degree of protection	IP 65																1					
Ambient temperature [1]	−20 to +60 °C																	1				
Safety approval	Without																		0			
	SIL [2]																		1			
Special version	Without																			0	0	0

[1] The maximum permissible ambient temperature of the solenoid valve depends on the permissible ambient temperature of the components, type of protection and temperature class.

[2] SIL according to IEC 61508

3 Design and principle of operation

The Type 3962-4 Solenoid Valve is suitable for controlling pneumatic linear or rotary actuators. The principle of operation is based on a solenoid plunger system with a downstream booster valve containing a diaphragm or spool actuator. A bridge can be used to perform the control with AC or DC voltage. The Type 3962-4 Solenoid Valve implements various way functions with K_{VS} 1.4 to 4.3 depending on the version.

3.1 Technical data

General data for pilot valve		
Type		**3962-4**
Design		Solenoid and poppet valve with return spring
Degree of protection		IP 65
Material	Casting compound	Polyurethane
	Enclosure	Polyamide and powder-coated aluminum, gray beige
	Internal parts	Stainless steel and nickel-plated brass
	Screws	Stainless steel
	Seals	Nitrile butadiene rubber
Mounting orientation		Any desired position
Approx. weight		550 g or 650 g

Electrical data for pilot valve with type of protection increased safety and encapsulation Ex em			
Type		**3962-42**	**3962-44**
Nominal signal	U_N	24 V AC/DC (–15 to +10 %), 40 to 65 Hz	230 V AC/DC (–15 to +10 %), 40 to 65 Hz
Power consumption		1.8 W	
Duty cycle		100 %	
Ambient temperature [1] in temperature class	T6	–20 to +50 °C	
	T5	–20 to +60 °C	
Connection		M20x1.5 cable gland	

Pneumatic data for pilot valve		
Type		**3962-4**
Supply	Medium	Instrument air or nitrogen
	Pressure	1.4 to 8 bar
Output signal		Same pressure as supply
Air consumption		No air consumption
K_{VS} [2]		0.05
Switching time		30 ms
Control pressure connection		CNOMO interface

[1] The maximum permissible ambient temperature of the solenoid valve depends on the permissible ambient temperature of the components, type of protection and temperature class.

[2] The air flow rate when p_1 = 2.4 bar and p_2 = 1.0 bar is calculated using the following formula: $Q = K_{VS} \times 36.22$ in m^3/h.

Booster valve, actuated on one side, K_{VS} 4.3, with threaded connections				
Switching function		3/2-way function	5/2-way function	6/2-way function
K_{VS} [1] (direction of flow)		1.9 (4→3), 1.5 (3→4) 4.3 (3→5), 4.7 (5→3)		
Design		Poppet valve with diaphragm actuator, soft seated, with return spring		
Material	Enclosure	Aluminum, powder coated, gray beige RAL 1019 or stainless steel 1.4404		
	Diaphragms	Chloroprene rubber (–20 to +80 °C) or silicone rubber (–45 to +80 °C)		
	Seals	Chloroprene rubber (–20 to +80 °C) or silicone rubber (–45 to +80 °C)		
	Springs	Stainless steel 1.4310		
	Screws	Stainless steel 1.4571		
Actuation		Controlled on one side with a pilot valve		
Operating medium		Instrument air (free from corrosive substances) or nitrogen [2], Instrument air (free from corrosive substances), air containing oil or non-corrosive gases [3]		
Compressed air quality according to ISO 8573-1		Particle size and density: Class 4 · Oil content: Class 3 · Pressure dew point: Class 3 or at least 10 K below the lowest ambient temperature to be expected		
Max. operating pressure [4]		10.0 bar		
Output signal		Operating pressure		
Pneumatic connection		G ½ or ½ NPT		
Ambient temperature [5]		–20 to +80 °C –45 to +80 °C		
Approx. weight		585 g	1100 g	

1) The air flow rate when p_1 = 2.4 bar and p_2 = 1.0 bar is calculated using the following formula: $Q = K_{VS} \times 36.22$ in m^3/h.
2) With internal pilot supply
3) With external pilot supply
4) To control the booster valve in the reversed direction of flow (3→4), the supply pressure must be higher than the operating pressure.
5) The maximum permissible ambient temperature of the solenoid valve depends on the permissible ambient temperature of the components, type of protection and temperature class.

Booster valve, actuated on one side, K_{VS} 2.0 or 4.3, with NAMUR interface			
Switching function		3/2-way function with exhaust air feedback	
K_{VS} [1] (direction of flow)		1.1 (4→3) 2.0 (3→5)	1.9 (4→3) 4.3 (3→5)
Design		Poppet valve with diaphragm actuator, soft seated, with return spring	
Material	Enclosure	Aluminum, powder coated, gray beige RAL 1019 or stainless steel 1.4404	
	Diaphragms	Chloroprene rubber (–20 to +80 °C) or silicone rubber (–45 to +80 °C)	
	Seals	Chloroprene rubber (–20 to +80 °C) or silicone rubber (–45 to +80 °C)	
	Springs	Stainless steel 1.4310	
	Screws	1.4571	
Actuation		Controlled on one side with a pilot valve	
Operating medium		Instrument air (free from corrosive substances) or nitrogen [2], Instrument air (free from corrosive substances), air containing oil or non-corrosive gases [3]	
Compressed air quality according to ISO 8573-1		Particle size and density: Class 4 · Oil content: Class 3 · Pressure dew point: Class 3 or at least 10 K below the lowest ambient temperature to be expected	
Max. operating pressure		10.0 bar	
Output signal		Operating pressure	
Pneumatic connection	Supply air	G ¼ or ¼ NPT and NAMUR interface ¼" [4] with G ⅜ / ⅜ NPT	G ½ or ½ NPT and NAMUR interface ½" [4]
	Exhaust air	G ½ or ½ NPT and NAMUR interface ¼" [4] with G ⅜ / ⅜ NPT	G ½ or ½ NPT and NAMUR interface ½" [4]
Ambient temperature [5]		–20 to +80 °C –45 to +80 °C	
Approx. weight		1380 g	1500 g

1) The air flow rate when p_1 = 2.4 bar and p_2 = 1.0 bar is calculated using the following formula: $Q = K_{VS} \times 36.22$ in m^3/h.
2) With internal pilot supply
3) With external pilot supply
4) NAMUR interface according to VDI/VDE 3845
5) The maximum permissible ambient temperature of the solenoid valve depends on the permissible ambient temperature of the components, type of protection and temperature class.

Booster valve, actuated on one side, K_{VS} 1.4 or 2.9 [1], with threaded connections or NAMUR interface			
Switching function		3/2-way function with exhaust air feedback	5/2-way function
K_{VS} [2]		1.4 or 2.9 [1]	
Design		Spool, metal-to-metal seat, zero overlap, with return spring	
Material	Enclosure	Aluminum, powder coated, gray beige RAL 1019 or stainless steel 1.4404	
	Seals	Silicone rubber	
	Filter	Polyethylene	
	Screws	1.4571	
Actuation		Controlled on one side with a pilot valve	
Operating medium		Instrument air (free from corrosive substances) or nitrogen [3], Instrument air (free from corrosive substances), air containing oil or non-corrosive gases [4]	
Compressed air quality according to ISO 8573-1		Particle size and density: Class 4 · Oil content: Class 3 · Pressure dew point: Class 3 or at least 10 K below the lowest ambient temperature to be expected	
Max. operating pressure		10.0 bar	
Output signal		Operating pressure	
Pneumatic connection		G ¼ or ¼ NPT and NAMUR interface ¼" [5] (K_{VS} 1.4) G ½ or ½ NPT and NAMUR interface ½" [5] (K_{VS} 2.9)	
Ambient temperature [6]		–45 to +80 °C	
Approx. weight		485 g (K_{VS} 1.4) 1760 g (K_{VS} 2.9)	

1) On request
2) The air flow rate when p_1 = 2.4 bar and p_2 = 1.0 bar is calculated using the following formula:
$Q = K_{VS} \times 36.22$ in m^3/h.
3) With internal pilot supply
4) With external pilot supply
5) NAMUR interface according to VDI/VDE 3845
6) The maximum permissible ambient temperature of the solenoid valve depends on the permissible ambient temperature of the components, type of protection and temperature class.

Booster valve, actuated on both sides, K_{VS} 1.4, with threaded connections or NAMUR interface					
Switching function		5/2-way function with two detent positions	5/3-way function with spring-centered mid-position (ports 2 and 4 closed)	5/3-way function with spring-centered mid-position (ports 2 and 4 vented)	5/3-way function with spring-centered mid-position (ports 2 and 4 supplied with air)
K_{VS} [1]		1.4			
Design		Spool, metal-to-metal seat, zero overlap			
Material	Enclosure	Aluminum, powder coated, gray beige RAL 1019 or stainless steel 1.4404			
	Seals	Silicone rubber			
	Filter	Polyethylene			
	Screws	1.4571			
Actuation		Controlled on both sides with two pilot valves			
Operating medium		Instrument air (free from corrosive substances) or nitrogen [2], Instrument air (free from corrosive substances), air containing oil or non-corrosive gases [3]			
Compressed air quality according to ISO 8573-1		Particle size and density: Class 4 · Oil content: Class 3 · Pressure dew point: Class 3 or at least 10 K below the lowest ambient temperature to be expected			
Max. operating pressure		10.0 bar			
Output signal		Operating pressure			
Pneumatic connection		G ¼ or ¼ NPT and NAMUR interface ¼" [4]			
Ambient temperature [5]		−45 to +80 °C			
Approx. weight		685 g			

1) The air flow rate when p_1 = 2.4 bar and p_2 = 1.0 bar is calculated using the following formula:
$Q = K_{VS} \times 36.22$ in m^3/h.
2) With internal pilot supply
3) With external pilot supply
4) NAMUR interface according to VDI/VDE 3845
5) The maximum permissible ambient temperature of the solenoid valve depends on the permissible ambient temperature of the components, type of protection and temperature class.

3.2 Summary of explosion protection approvals

Type	Certification			Type of protection/comments
	EC type examination certificate	Number Date	BVS 15 ATEX E 029 X 2019-07-04	II 2G Ex eb em IIC T4/T5/T6 Gb II 2D Ex tb IIIC T4/T5/T6

4 Accessories

Order no.	Designation
1400-6751	Adapter plate with NAMUR interface ¼" on NAMUR rib (G ¼)
1400-9924	Adapter plate with NAMUR interface ¼" on NAMUR rib (¼ NPT)
1400-5905	Support for NAMUR rib including fastening screw (required when a positioner or limit switch is additionally mounted on the linear actuator, DN 15 to 80)
	Vent filter
8504-0066	Filter made of polyethylene, G ¼ connection, degree of protection IP 54
8504-0068	Filter made of polyethylene, G ½ connection, degree of protection IP 54

5 Mounting and start-up

Note

The mounting accessories (fastening screws, washers and O-rings) are included in the scope of delivery.

5.1 Mounting position

Any mounting position may be used. The following applies concerning the installation:

➔ Mount the solenoid valve in such a way that the M20x1.5 cable gland and vent plugs face downward (in cases where this is not possible, mount it in the horizontal position).

➔ On mounting, make sure that 300 mm or more clearance is kept above the enclosure cover.

5.2 Ambient temperature

The permissible ambient temperature is –20 to +60 °C.

Refer to the EC type examination certificate PTB 02 ATEX 2125 X for the permissible ambient temperature range for use in hazardous areas.

5.3 Wall mounting

Type 3962-4XXXXXXX13 and Type 3962-4XXXXXXX14

To mount the devices, insert screws through the holes.

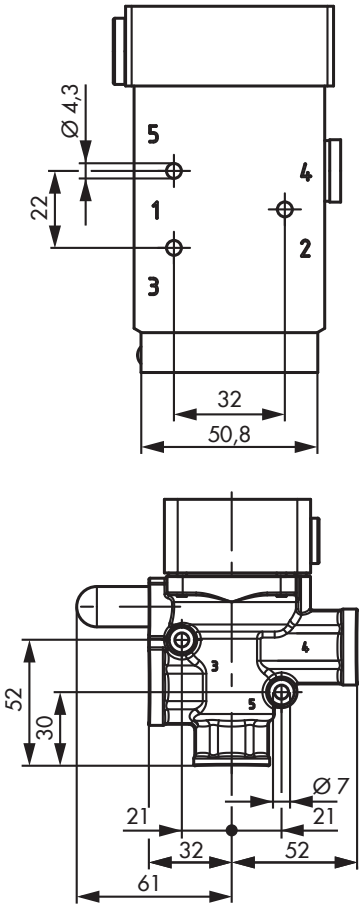

Fig. 1: *Booster valve without solenoid head (dimensions in mm)*

5.4 Mounting on rotary actuators

Type 3962-4XXXXXXX0

These devices can be mounted on rotary actuators with NAMUR interface (Fig. 2).

Before mounting, check that two O-rings are seated properly. Use a coded grub screw to determine the direction of action of the rotary actuator at the connecting flange. Use two screws to mount the device.

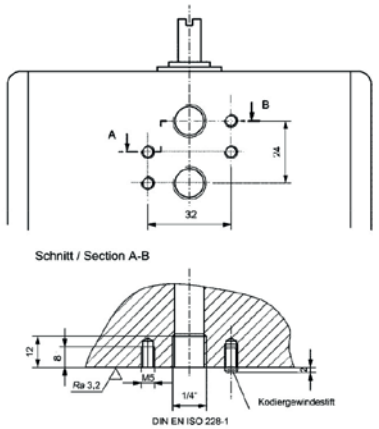

Fig. 2: *NAMUR interface ¼" (dimensions in mm)*

5.5 Attachment to linear actuators using an adapter plate

Type 3962-4XXXXXXX0

These devices can be mounted on linear actuators with a NAMUR rib using an adapter plate (Fig. 3). When positioners or limit switches are also to be mounted to the linear actuator (DN 15 to 80), a support (see Accessories) is required.

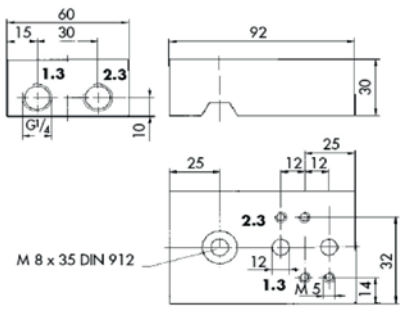

Fig. 3: *NAMUR rib adapter plate (dimensions in mm)*

5.6 Mounting on linear actuators using CrNiMo steel pipe fitting

Type 3962-4XXXXXX013X0 and Type 3962-4XXXXXX014X2

These devices can be mounted on linear actuators, e.g. SAMSON Type 3271 or 3277 Actuators, using a CrNiMo steel pipe fitting (Fig. 4). See Mounting and Operating Instructions EB 8310-x for details on how to mount SAMSON actuators. Depending on the actuator size, the screw fitting consists either of two screw fittings with coupling nuts or an extension pipe with screw fitting and coupling nut.

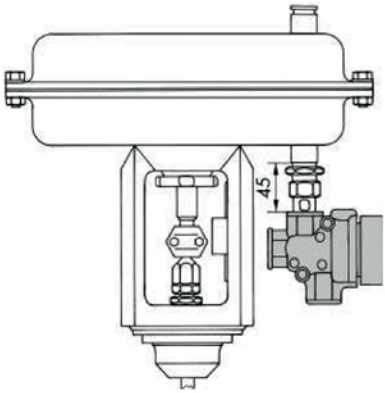

Fig. 4: *Mounting on linear actuators using CrNiMo steel pipe fitting*

Actuator area	Connection	Order no.
80/175/240	G ¼ / G ¼	1400-6759
350/355/700/750	G ⅜ / G ¼	1400-6761
	G ⅜ / G ¼	1400-6735
1000/1400-60	G ¼ / G ½	1400-6736
1400-120/2800	G 1 / G ½	1400-6737

6 Pneumatic connection

⚠ WARNING

Risk of injury due to high pressure inside device.

➔ *Prior to performing repair and maintenance work on the device, depressurize the connecting lines.*

The air connections are designed as threaded holes with G ¼ (¼ NPT) or G ½ (½ NPT) thread depending on the device version.

➔ Run and attach the connecting lines and screw joints according to good professional practice.

➔ Check the connecting lines and screw joints for leaks and damage at regular intervals and repair them.

➔ The K_{VS} coefficient of an upstream pressure reducing valve must be at least 1.6 times larger than the K_{VS} coefficient of the device.

Port labeling K_{VS} 2.0 and 4.3

Inscription	Function
4	Supply air
9	External pilot supply
3/5	Output

Port labeling K_{VS} 1.4 and 2.9

Inscription	Function
1	Supply air
9	External pilot supply
2/4 and 3/5	Output

6.1 Sizing of the connecting line

Refer to the table below for the minimum required nominal size of the connecting line at the port ***4*** of the enclosure.

The specifications apply to a connecting line shorter than 2 m. Use a larger nominal size for lines longer than 2 m.

Connection	9	4
Pipe [1]	6x1 mm	12x1 mm
Hose [2]	4x1 mm	9x3 mm

[1] Outside diameter x Wall thickness
[2] Inside diameter x Wall thickness

6.2 Compressed air quality

With internal pilot supply over port ***4*** (delivered status):

➔ Instrument air (free from corrosive substances), 1.4 to 8 bar

With external pilot supply over port ***9***

➔ Instrument air (free from corrosive substances), air containing oil or non-corrosive gases with 0 to 8 bar

Compressed air quality according to ISO 8573-1		
Particle size and quantity	Oil content	Pressure dew point
Class 4	Class 3	Class 3
≤5 µm and 1000/m³	≤1 mg/m³	–20 °C/10 K below the lowest ambient temperature to be expected

6.3 Supply air

In the delivered state, the supply air is fed internally over port ***4***, if not specified otherwise.

➔ On mounting the solenoid valve on rotary or linear actuators fitted with positioners, the supply must be changed to an external pilot supply over port ***9***.

To change to an external supply over port ***9***, proceed as follows:

6.3.1 K_{VS} 2.0, 2.9 and 4.3

➔ Loosen the cap screw on the connection plate and remove plate 1 and turnable gasket 2.

➔ Turn the turnable gasket 2 by 90°. The tip of gasket 2 must rest in the plate cutout marked '9'.

➔ Fasten plate 1 and turnable gasket 2 to the connection plate.

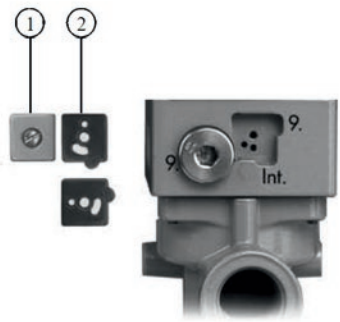

Fig. 5: *Turnable gasket of the booster valve*

6.3.2 K_{VS} 1.4

➔ Undo both hexagonal socket head screws (Fig. 6) and remove the black head. Make sure that the two black O-rings on the CNOMO interface do not get damaged (Fig. 7).

Fig. 6: *Type 3962-4 Solenoid Valve, K_{VS} 1.4*

➔ Undo the two hexagonal socket head screws (Fig. 7) and carefully remove the CNOMO interface.

Fig. 7: *CNOMO interface with booster*

Make sure that the gaskets on the booster valve and CNOMO interface do not get damaged.

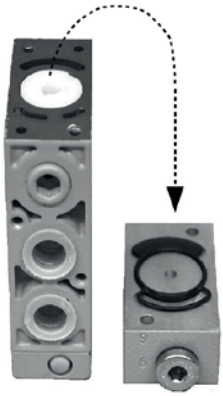

Fig. 8: *CNOMO interface and booster*

Internal air supply:

Do not seal the marked hole with the black turnable gasket (Fig. 9, left).

External pilot supply:

Seal the marked hole with the black turnable gasket (Fig. 9, right).

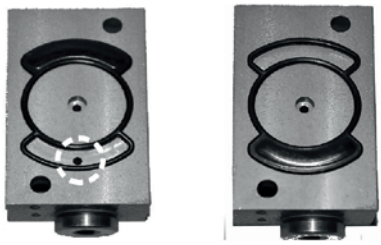

Fig. 9: *CNOMO interface: location of the turnable gasket for internal supply (left) and for external supply (right)*

➔ Carefully place the CNOMO interface onto the booster valve. Make sure that all gaskets are seated properly on the booster valve (if a gasket is missing, the entire Type 3962 Solenoid Valve must be replaced with a new device).

Observe direction on installation:

The port 9 (external pilot supply) of the CNOMO interface must be located on the same side as port 1 (supply) or port 3 (exhaust) of the booster valve.

➔ Use the two hexagonal socket head screws to fasten the CNOMO interface (Fig. 7).

➔ Carefully place the black solenoid head onto the CNOMO interface. Make sure that the two openings of the black solenoid head are seated properly on the gaskets of the CNOMO interface (if a gasket is missing, the entire Type 3962 Solenoid Valve must be replaced with a new device). Make sure it is installed in the correct direction.

➔ Use the two hexagonal socket head screws to fasten the black solenoid head (Fig. 6).

7 Electrical connections

⚠ DANGER

For electrical installation, observe the relevant electrotechnical regulations and the accident prevention regulations that apply in the country of use. In Germany, these are the VDE regulations and the accident prevention regulations of the employers' liability insurance.
The degree of protection IEC 60529: 1989 is only guaranteed when the enclosure cover is mounted and the connections have been properly mounted.
The following regulations apply to installation in hazardous areas: EN 60079-14 (VDE 0165, Part 1) Explosive Atmospheres – Electrical Installations Design, Selection and Erection.

The electrical connection is made using an M20x1.5 cable gland to the terminals in the enclosure.

7.1 Cable entry

➔ See information provided by the manufacturer of the solenoid (section 8)

8 Information provided by the manufacturer of the installed solenoid

The information provided by the manufacturer on the solenoid VACC-S13-18-K4-…-ME can be found on the Festo website (www.festo.com -> Support Portal).

The link to download at the time of publishing of this document:
▶ https://www.festo.com/net/SupportPortal/Files/695843/VACC-S13-18-K4-_-_ME_instruction_2019-08_8073465g1.pdf

9 Malfunctions

Depending on the operating conditions, check the device at certain intervals to prevent a possible failure before it can occur. Plant operators are responsible for drawing up an inspection and test plan.

Malfunction	Possible reasons	Recommended action
The solenoid valve does not switch.	Turnable gasket incorrectly positioned.	Turn the turnable gasket as described in section 6.3 or supply port 9 with air.
The solenoid valve leaks to the atmosphere.	O-rings slipped (NAMUR interface).	Check that the O-rings are correctly seated.
	Pilot pressure is insufficient and an intermediate position is reached (air is constantly vented)	Check the pressure line for leakage. Use a larger cross-section for the pressure line, if necessary.

SAMSON
MESS- UND REGELTECHNIK

EC-Declaration of Conformity

It is hereby confirmed that the following product

E/P Binary Converter

Type 3962

complies with the requirements as laid down in the Directives on the Approximation of Legislation of the EC Member States. The requirements of the Directives and Certificates are satisfied by compliance with the following standards:

EMC 2004/108/EC	EN 61000-6-2:2005, EN 61000-6-3:2010, EN 61326-1:2006
Low Voltage Directive 2006/95/EC	EN 61010-1:2010

Manufacturer:

SAMSON AKTIENGESELLSCHAFT
Weismüllerstraße 3
60314 Frankfurt am Main
Germany

Frankfurt, 2012-09-11

i.V. Michalik

Stephan Michalik
Head of Department
Quality Management

i.V. Erben

Stefan Erben
Head of Department
Development Electronic Industrial

ce_3962-0_en_rev02.pdf

SAMSON AKTIENGESELLSCHAFT
Weismüllerstraße 3 · 60314 Frankfurt am Main
Telefon: +49 69 4009-0 · Telefax: +49 69 4009-1507
Internet: http://www.samson.de

Revision 02

5496578 | DRW I - | 205116

Translation

1 # EU-Type Examination Certificate Supplement 2

2 **Equipment intended for use in potentially explosive atmospheres Directive 2014/34/EU**

3 EU-Type Examination Certificate Number: **BVS 15 ATEX E 029 X**

4 Product: **Solenoids type VACC-S13-18-K4-...-... ME**

5 Manufacturer: **FESTO AG & Co. KG**

6 Address: **Ruiter Straße 82, 73734 Esslingen, Germany**

7 This supplementary certificate extends EU-Type Examination Certificate No. BVS 15 ATEX E 029 X to apply to products designed and constructed in accordance with the specification set out in the appendix of the said certificate but having any acceptable variations specified in the appendix to this certificate and the documents referred to therein.

8 DEKRA Testing and Certification GmbH, Notified Body number 0158, in accordance with Article 17 of Directive 2014/34/EU of the European Parliament and of the Council, dated 26 February 2014, certifies that this product has been found to comply with the Essential Health and Safety Requirements relating to the design and construction of products intended for use in potentially explosive atmospheres given in Annex II to the Directive.
The examination and test results are recorded in the confidential Report No. BVS PP 15.2083 EU.

9 The Essential Health and Safety Requirements are assured in consideration of:

EN IEC 60079-0:2018	**General requirements**
EN IEC 60079-7:2015 + A1:2018	**Increased Safety "e"**
EN 60079-18:2015 + A1:2017	**Encapsulation "m"**
EN 60079-31:2014	**Protection by Enclosure "t"**

Except in respect of those requirements listed under item 18 of the appendix.

10 If the sign "X" is placed after the certificate number, it indicates that the product is subject to the Special Conditions for Use specified in the appendix to this certificate.

11 This EU-Type Examination Certificate relates only to the design and construction of the specified product. Further requirements of the Directive apply to the manufacturing process and supply of this product. These are not covered by this certificate.

12 The marking of the product shall include the following:

Ex **II 2G Ex eb mb IIC T* Gb**
II 2D Ex tb IIIC T*°C Db
The values signed with * are defined in chapter 15) parameters

DEKRA Testing and Certification GmbH
Bochum, 2019-07-04

Signed: Jörg-Timm Kilisch

Managing Director

DAkkS Deutsche Akkreditierungsstelle D-ZE-14144-01-00

DEKRA Testing and Certification GmbH, Handwerkstr. 15, 70565 Stuttgart, Germany
Certification body: Dinnendahlstr. 9, 44809 Bochum, Germany
Phone +49.234.3696-400, Fax +49.234.3696-401, e-mail DTC-Certification-body@dekra.com

13 **Appendix**

14 **EU-Type Examination Certificate**

BVS 15 ATEX E 029 X
Supplement 2

15 **Product description**

15.1 **Subject and type**

Solenoid coils type VACC-S13-18-K4-...*1-...*2ME

*1 The dots will be replaced by 1-3 numbers and letters that define the rated voltage and the installation of a fuse (letter F).
*2 The dots will be replaced by 1-3 numbers and letters that define the target region. For the ATEX certificate the marking is EX4.

15.2 **Description**

The solenoid coils have been designed as an actuator for valves. They are designed in the type of protection Encapsulation "mb" or Protection by Enclosure "tb". For the power connection of the solenoid coils a connecting room in type of protection "eb" is available. The housing is sealed at the top with a lid and at the bottom with sealing compound. On one side a thread is arranged for attaching one separately certified cable entry. In the enclosure, a coil and further electrical components are fitted.

The attachment to a valve and the mechanical design of the valves are not part of this EU-Type Examination Certificate.

Reason for the supplement:

- New enclosure design details and materials
- Small type description changes
- Enlarged ambient temperature range beginning from -30 °C
- New standard editions.

15.3 **Parameters**

15.3.1 Electrical parameters

Type w/o fuse	VACC-S13-18-K4-1U-...ME	VACC-S13-18-K4-2U-...ME	VACC-S13-18-K4-3U-...ME	VACC-S13-18-K4-27U-...ME
Type with fuse	VACC-S13-18-K4-1UF-...ME	---	---	---
Rated voltage	24 V +/- 10 % DC oder AC 40 ... 65 Hz	110 V +/- 10 % DC oder AC 40 ... 65 Hz	230 V +/- 10 % DC oder AC 40 ... 65 Hz	60 V +/- 10 % DC oder AC 40 ... 65 Hz
Breaking capacity of installed fuse F	Littelfuse: 4000 A oder ESKA: 300 A	---	---	---
Rated power	1.8 W / 1.8 VA			

DEKRA Testing and Certification GmbH, Handwerkstr. 15, 70565 Stuttgart, Germany
Certification body: Dinnendahlstr. 9, 44809 Bochum, Germany
Phone +49.234.3696-400, Fax +49.234.3696-401, e-mail DTC-Certification-body@dekra.com

15.3.2 Ambient temperature range and temperature class and surface temperature

Ambient temperature range	-30 °C ≤ T_a ≤ +60 °C	-30 °C ≤ T_a ≤ +60 °C	-30 °C ≤ T_a ≤ +50 °C
Maximum medium temperature	+60 °C	+60 °C	+50 °C
II 2G Ex eb mb IIC * Gb	T4	T5	T6
II 2D Ex tb IIIC * °C Db	T130 °C	T95 °C	T85 °C

16 **Report Number**

BVS PP 15.2083 EU, as of 2019-07-04

17 **Special Conditions for Use**

The solenoids have to be installed and used in a manner that electrostatic charges are excluded by operation, maintenance and cleaning.

Each solenoid coil that does not feature an internal fuse has to be provided with an external fuse to prevent short-circuits. Up to a rated voltage of 250 V, the breaking capacity of the fuse must be at least 1500 A.

In case of an internal fuse type with 300 A breaking capacity is a warning marking "MAX. PERMISSIBLE SHORT-CIRCUIT CURRENT OF THE POWER SUPPLY SOURCE 300 A" required.

18 **Essential Health and Safety Requirements**

The Essential Health and Safety Requirements are covered by the standards listed under item 9. For this product the standard EN IEC 60079-0:2018 is equivalent to the harmonized standard EN 60079-0:2012 + A11:2013 in terms of safety.

19 **Drawings and Documents**

Drawings and documents are listed in the confidential report.

We confirm the correctness of the translation from the German original.
In the case of arbitration only the German wording shall be valid and binding.

DEKRA Testing and Certification GmbH
Bochum, 2019-07-04
BVS-Ld/Mu A 20180851

Managing Director

DEKRA Testing and Certification GmbH, Handwerkstr. 15, 70565 Stuttgart, Germany
Certification body: Dinnendahlstr. 9, 44809 Bochum, Germany
Phone +49.234.3696-400, Fax +49.234.3696-401, e-mail DTC-Certification-body@dekra.com

SAMSON AKTIENGESELLSCHAFT
Weismüllerstraße 3 · 60314 Frankfurt am Main, Germany
Phone: +49 69 4009-0 · Fax: +49 69 4009-1507
samson@samsongroup.com · www.samsongroup.com

2020-11-05 · English